1. EXTERNAL DIMENSIONS

Unit: mm

- **NS**: Side Plate Version – Side Mount

EHB06-NS

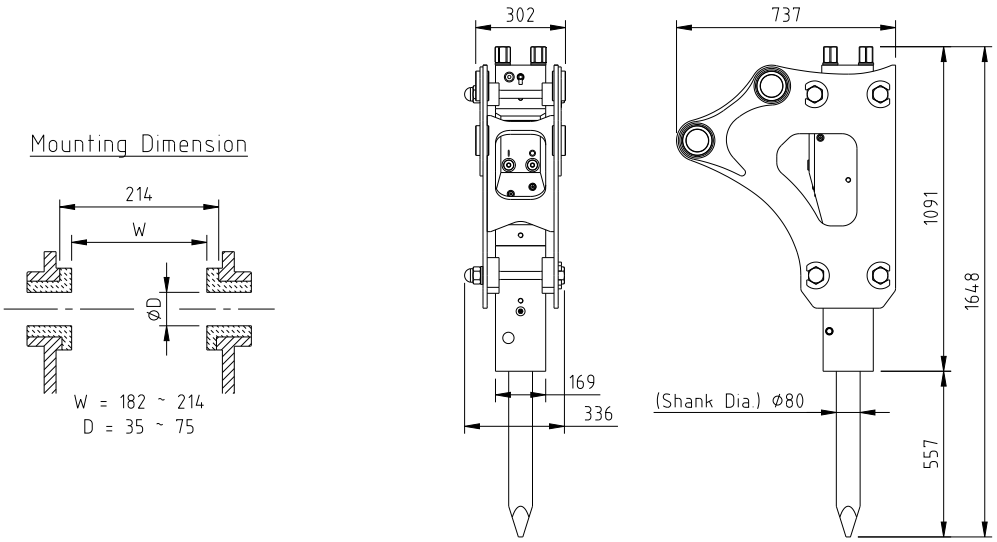

- **NL**: Side Plate Version – Backhoe Mount

EHB06-NL

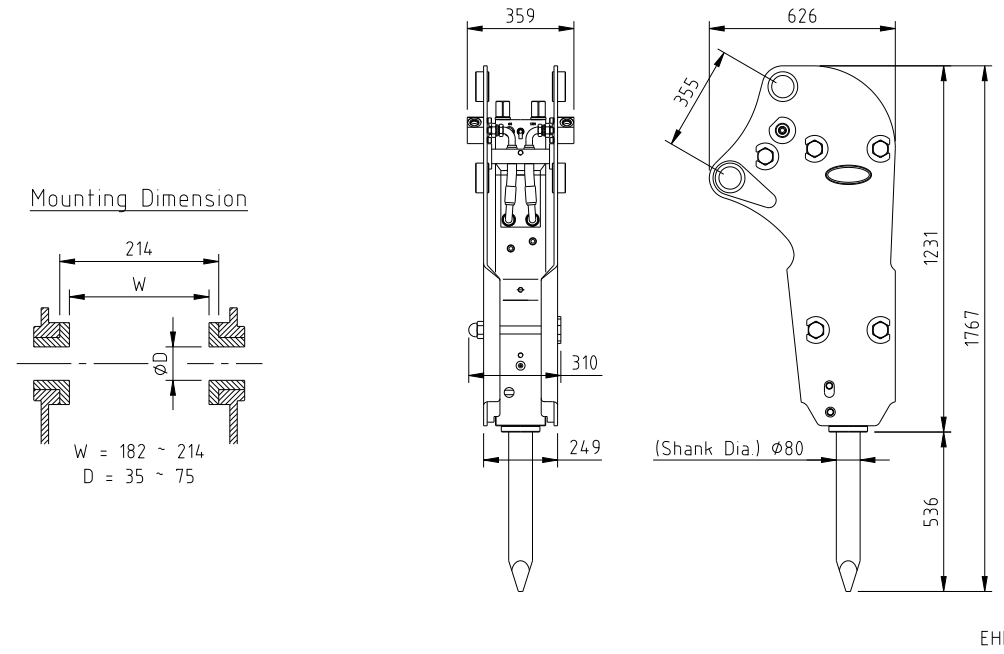

- **NA**: Side Plate Version – Adapter Mount

EHB06-NA

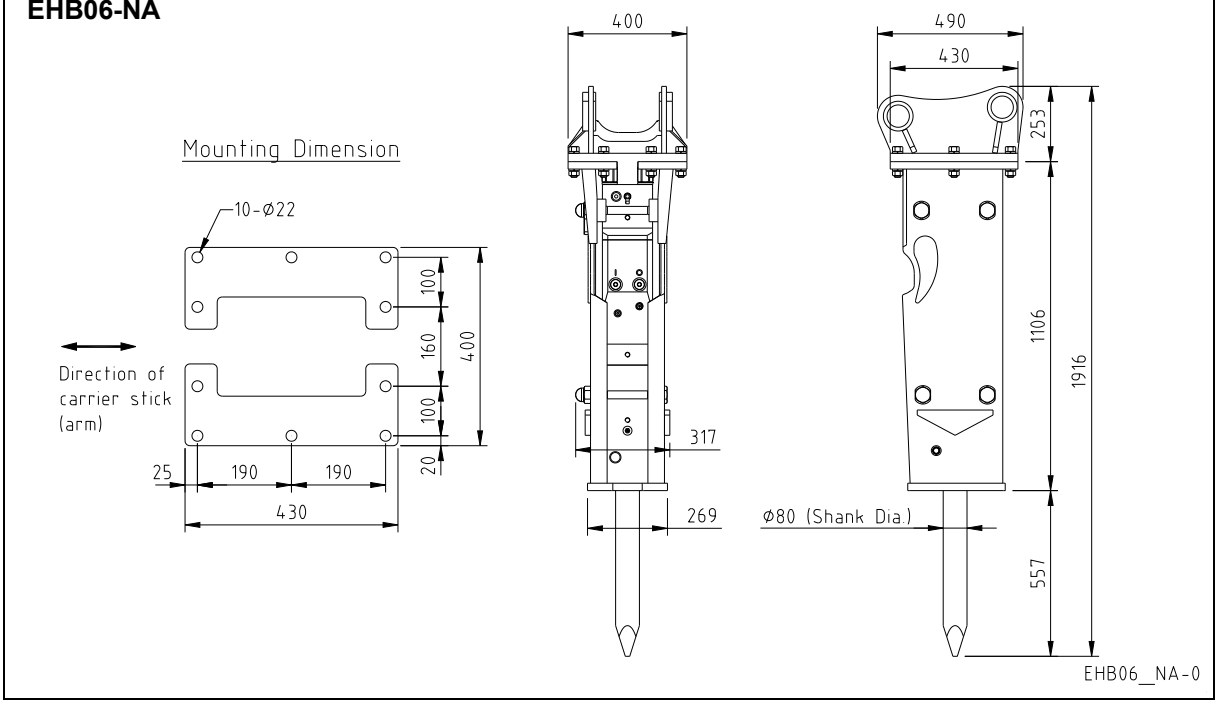

- **BA**: Silenced Version – Adapter Mount

EHB06-BA

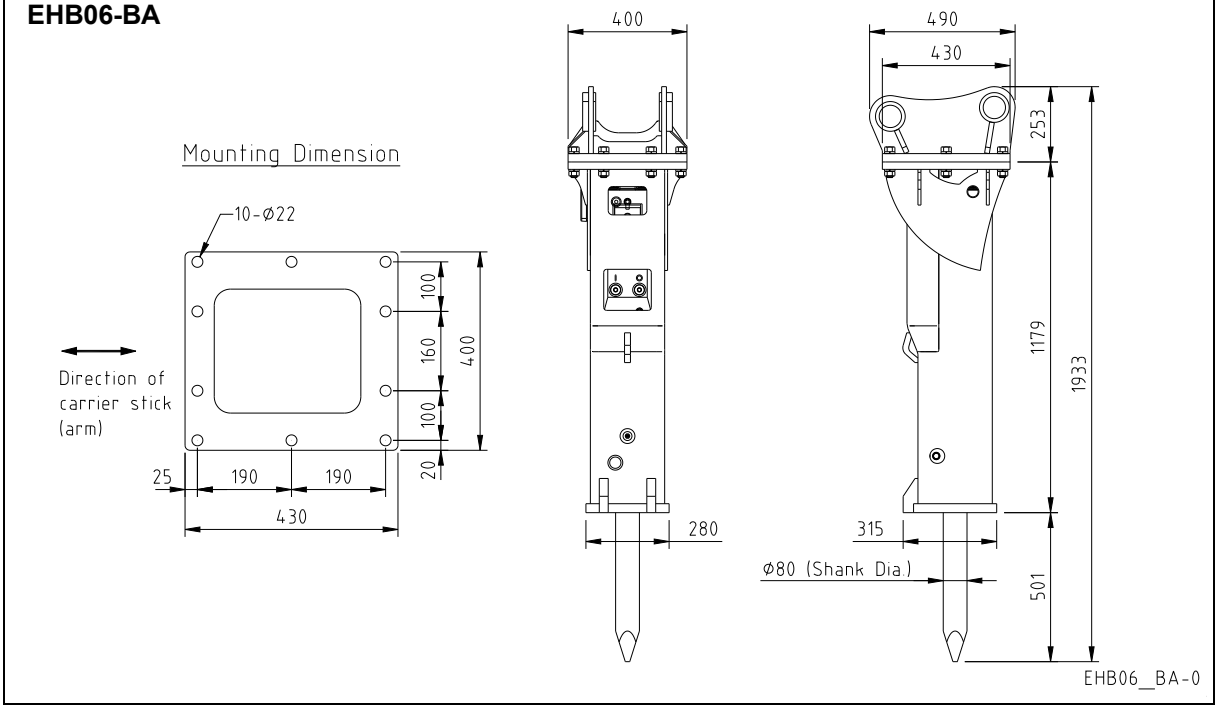

- Standard Mounting Adapter for NA, BA versions

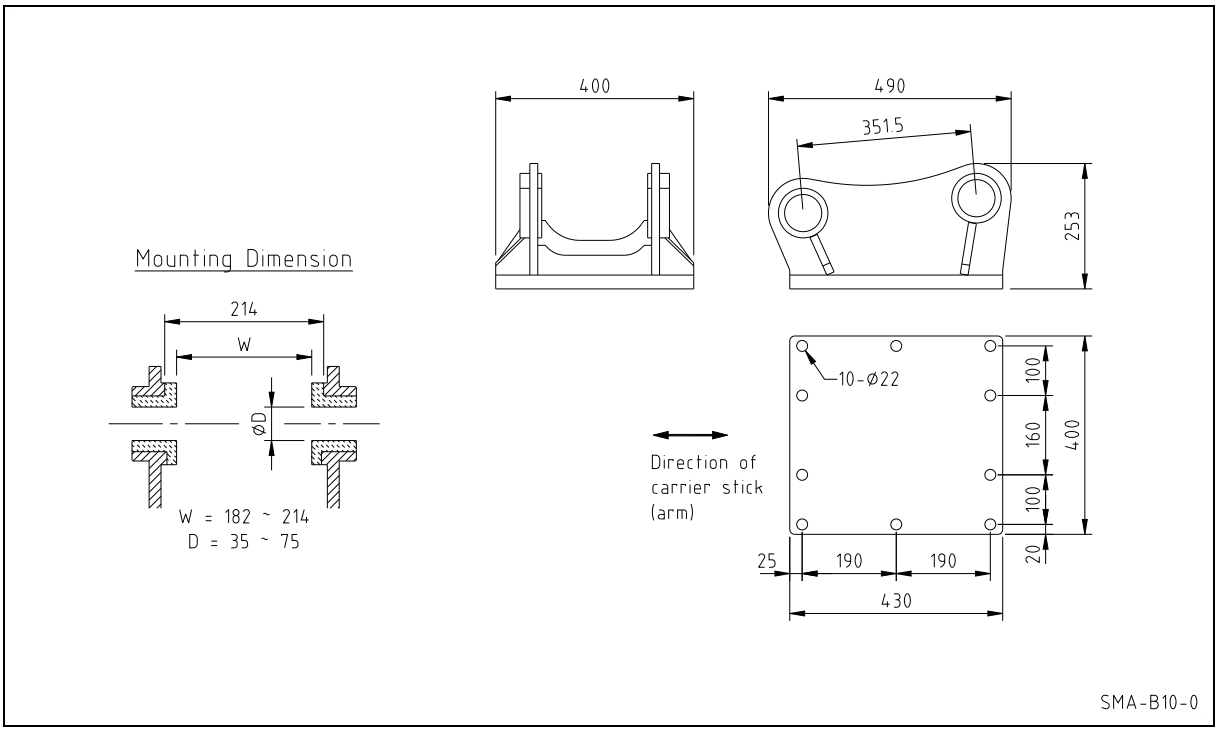

2. BASIC SPECIFICATIONS

Bracket Version	NS	NL	NA	BA	
Available Option					
2-speed control	X	X	X	X	
Dust protector	X	X	X	X	
Auto-greasing kit	X	X	X	X	
Under-water operating kit	Opt.	Opt.	Opt.	Opt.	
Working Weight [1]	377 (831)	395 (871)	469 (1034)	482 (1063)	kg (lbs)
Weight without chisel and mounting adapter	347 (765)	365 (805)	355 (782)	368 (811)	kg (lbs)
Overall Length [2]	1,648 (64.9)	1,767 (69.6)	1,916 (75.4)	1,933 (76.1)	mm (in.)
Weight of components					
Power-cell	211	(474)			kg (lbs)
Chisel (standard)	30	(66)			kg (lbs)
Mounting adapter [3]	84	(185)			kg (lbs)
Required Oil Flow	45 ~ 90	(12 ~ 24)			lpm (gpm)
Operating Pressure	130 ~ 170	(1,900~2,500)			bar (psi)
Input Power (max.)	25.5				kW
Blow Frequency	520 ~ 1,000				bpm
Impact Energy	1,000	(738)			J (ft.lbf)
Tool (Chisel) Shank Diameter	80	(3.15)			mm (in.)
Applicable Carrier Weight					
Optimal range	6.0 ~ 8.0	(13 ~ 18)			t (klbs)
Available range	*5.0 ~ 11*	*(11 ~ 24)*			t (klbs)

Notes :

1) Total weight including standard tool, standard mounting adapter and spacers but excluding hydraulic hoses, fittings and mounting pins.
2) The length measured from the tool tip of the standard tool to the top of the breaker including mounting adapter.
3) Including standard mounting adapter, fasteners and spacers (for NA, BA version).

3. INSTALLATION SPECIFICATIONS

Gas Charging Pressure [1]			
Back-head (Piston accumulator) [2]	15 ~ 17	(220~250)	bar (psi)
High pressure accumulator	n/a		bar (psi)
Hydraulic Piping			
Line size (min. internal diameter)	19	(3/4)	mm (in.)
Acceptable back pressure (max.) [3]	15	(220)	bar (psi)
Hose Connections of breaker			
Oil supply (IN) & return (OUT)	BSP 3/4" O-Ring Boss Female		
Air (A)	BSP 1/2" O-Ring Boss Female		
Pressure Relief (min.)	40 (600) + measured max. operating pressure		
Acceptable Hydraulic Oil			
Operating temperature [4]	-20 ~ +85	(-4 ~ +185)	°C (°F)
Viscosity	1000 ~ 10		cSt

Notes :

1) The prefill nitrogen gas pressure measured statically (breaker not operating) without down load on the tool at the stabilized gas temperature of +20 °C
2) The recommended value at the normal operating condition (supplied oil flow, oil temperature and viscosity, etc.)
3) The maximum allowed oil pressure at the breaker's connection point to the return line (measured statically without the breaker)
4) The allowed temperature limits when using the oil of vicosity grade 46

4. BREAKING PERFORMANCE (per 8-hour shift)

Unit : m^3 / 8hrs (yd^3 / 8hrs)

Reinforced Concrete (t=30cm)	25 ~ 50	(33 ~ 65)
Non-reinforced Concreter (t=30cm)	45 ~ 100	(59 ~ 131)
Reducing oversize boulders	60 ~ 120	(78 ~ 157)
Quarrying (medium hard rock)	5 ~ 10	(7 ~ 13)

Notes :

- These figures are intended as a guideline only and varies according to the type of the material to be broken, the carrier's condition, the operator's skill, the place of usage, etc.

5. AVAILABLE TOOLS (CHISELS)

Shank Diameter	80 (3.15)					mm (in.)
	TYPE OF TOOL :					
	Moil Wedge (Pyramid)	Moil Point (Conical)	Flat Wedge –Horizontal (Cross-cut)	Flat Wedge –Vertical (Inline-cut)	Wide Flat Wedge (Asphalt Cutter)	
Tool Diameter [1)]	80 (3.15)	80 (3.15)	80 (3.15)	80 (3.15)	80 (3.15)	mm (in.)
Tool Length	850 (33)	850 (33)	850 (33)	850 (33)	750 (30)	mm (in.)
Tool Weight	30 (66)	30 (66)	31 (68)	31 (68)	41 (90)	kg (lbs)
Tool Shape	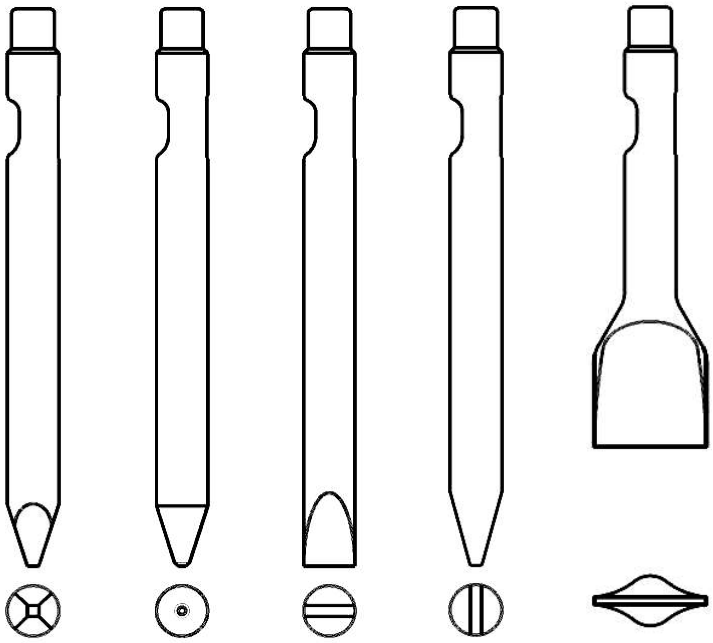					

Notes :

1) The diameter of the tool portion outside the breaker body

- Other special designs are also available on request.